e·Box®
MOTORIZED MOUNTS

Mobile electric height adjustable stand

Order nr: 487A01

Product dimensions

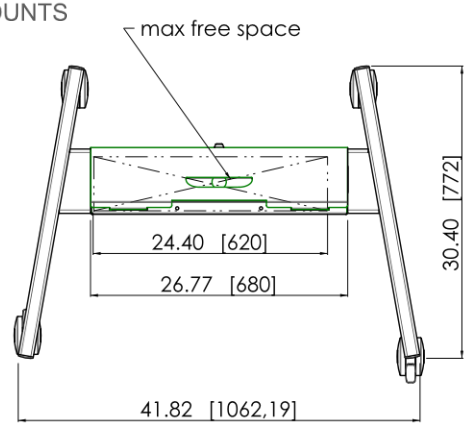

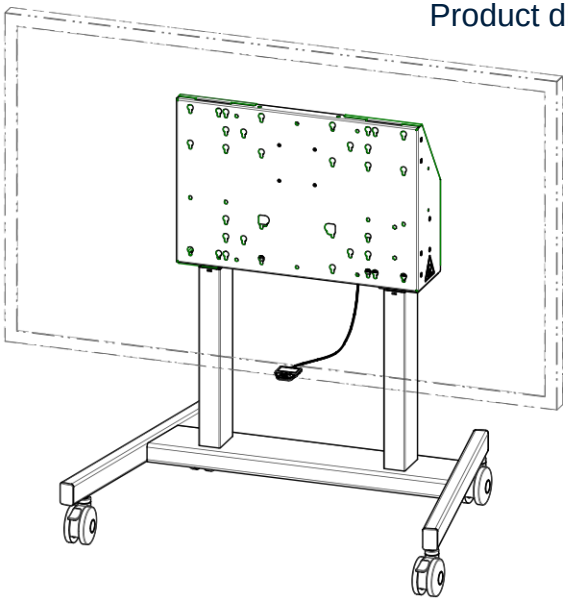

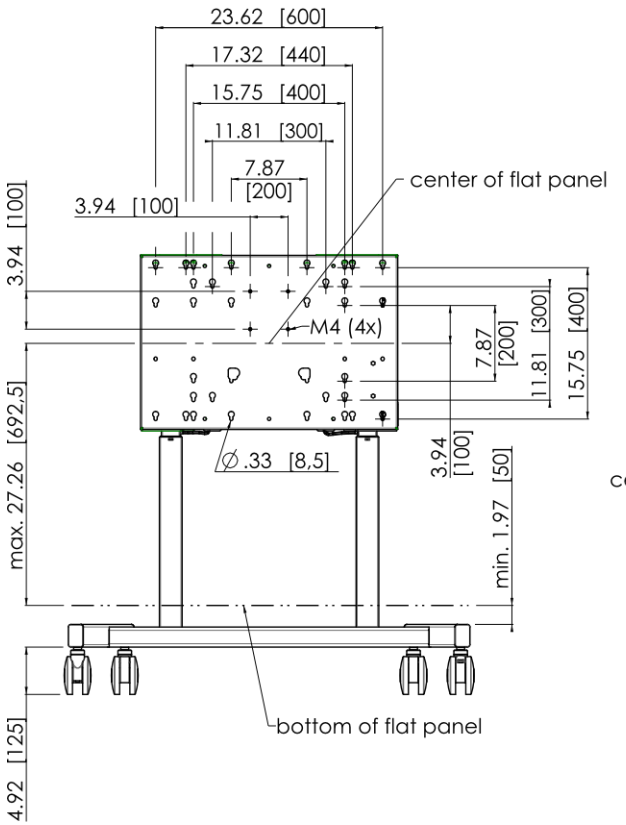

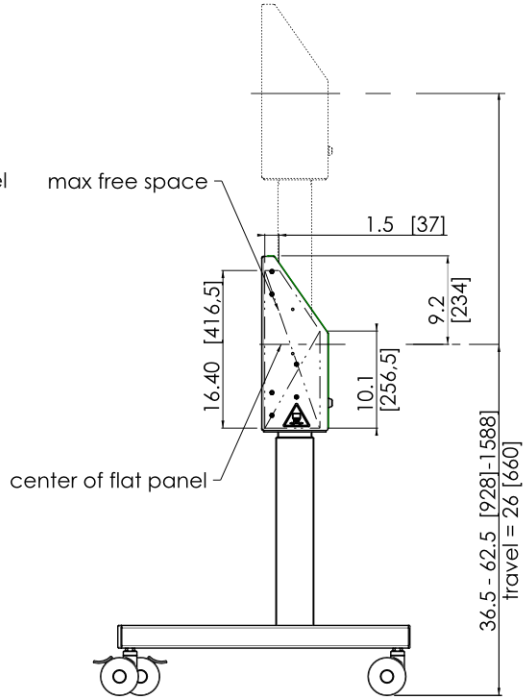

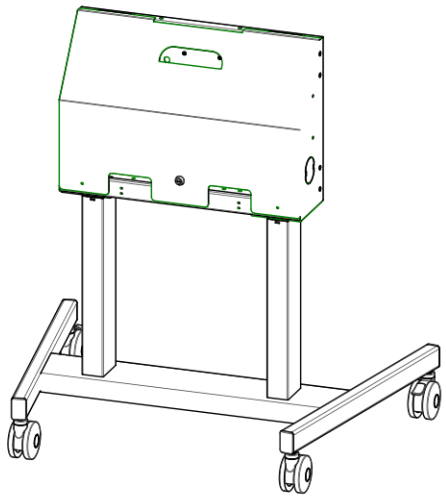

Rev: 20170529